■Outline drawings

UNIT	SCALE
mm	N.T.S

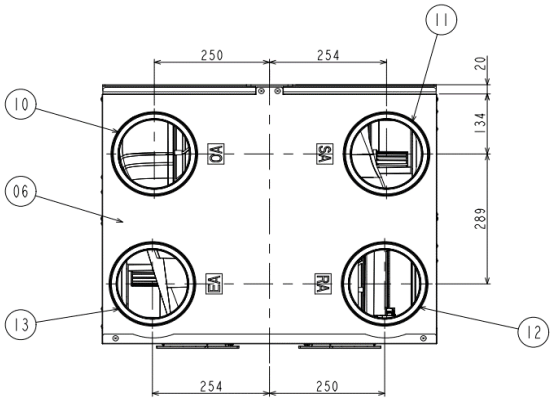

Wall bracket

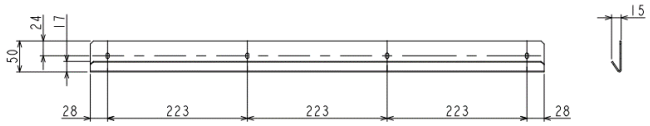

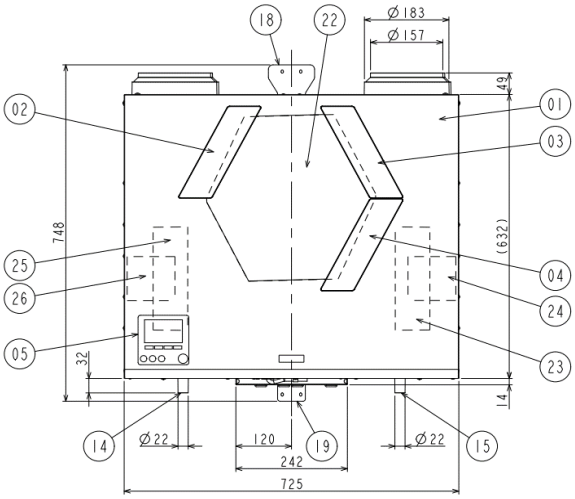

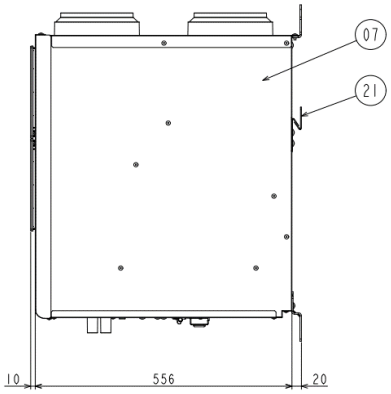

Back side of the unit

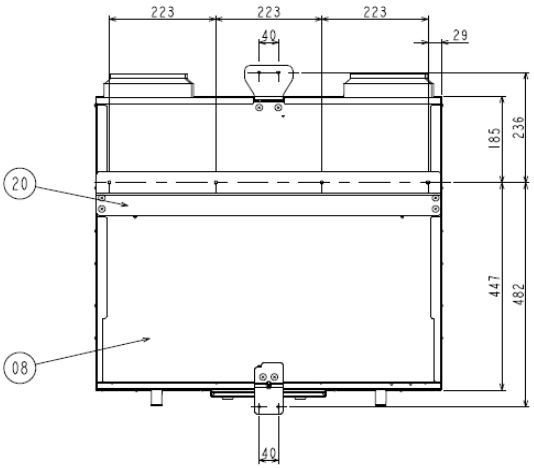

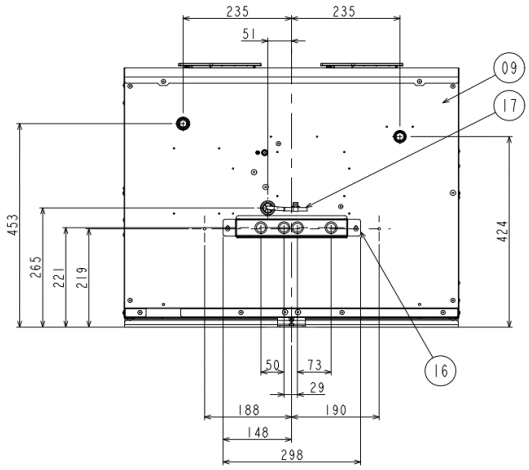

Parts List

No.	PARTS NAME	MATERIAL	REMARKS	No.	PARTS NAME	MATERIAL	REMARKS
01	Front Casing	Painted metal	Munsell 6.2PB 8.8/1.6	14	Drain pipe (EA)	Synthetic Resin	
02	Filter Cover (OA)	Synthetic Resin		15	Drain pipe (SA)	Synthetic Resin	
03	Filter Cover (RA)	Synthetic Resin		16	PCB Under Cover	Steel sheet	Munsell 6.2PB 8.8/1.6
04	Filter Cover (SA)	Synthetic Resin		17	Power Supply Cord	—	
05	Controller	—		18	Wall Mount Hook Top	Galvanized Steel	
06	Top Casing	Painted metal	Munsell 6.2PB 8.8/1.6	19	Wall Mount Hook Down	Galvanized Steel	
07	Side Casing	Painted metal	Munsell 6.2PB 8.8/1.6	20	Wall Mount Hook Center	Galvanized Steel	
08	Back Casing	Galvanized Steel Sheet		21	Wall Bracket	Galvanized Steel	
09	Bottom Casing	Painted metal	Munsell 6.2PB 8.8/1.6	22	Heat Exchanger	Synthetic Resin	
10	Pipe Guide (OA)	Synthetic Resin		23	Air Supply Fan	Synthetic Resin	
11	Pipe Guide (SA)	Synthetic Resin		24	Air Supply Fan Motor	DC	
12	Pipe Guide (RA)	Synthetic Resin		25	Air Exhaust Fan	Synthetic Resin	
13	Pipe Guide (EA)	Synthetic Resin		26	Air Exhaust Fan Motor	DC	

※OA : Outdoor Air, SA : Supply Air, RA : Return Air, EA : Exhaust Air